LUAU

HANGING LAMP

SMALL	MEDIUM
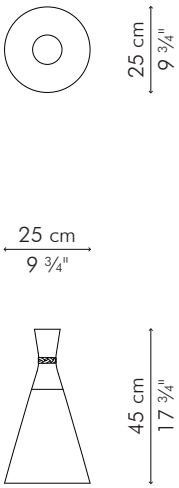	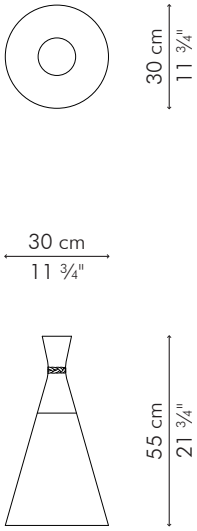
0.25 kg / 0.55 lb	0.35 kg / 0.77 lb
1 kg / 2 lbs	1.25 kg / 2.75 lbs
0.041 m³	0.067 m³
1 x 100 watts	1 x 100 watts
code: LLU-B-0917	LLU-B-1121

Surface mounted pre-wired lamp
E26 / E27
110V - 240V

INDOOR Salago fiber, Buri (palm leaf spines), powder coated steel

Cream / Brown

LUAU

HANGING LAMP

LARGE

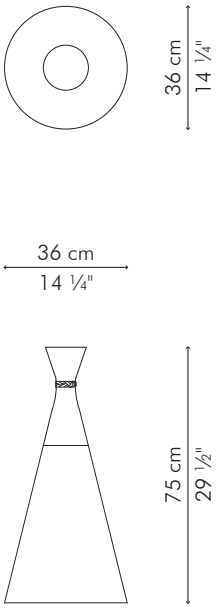

EXTRA LARGE

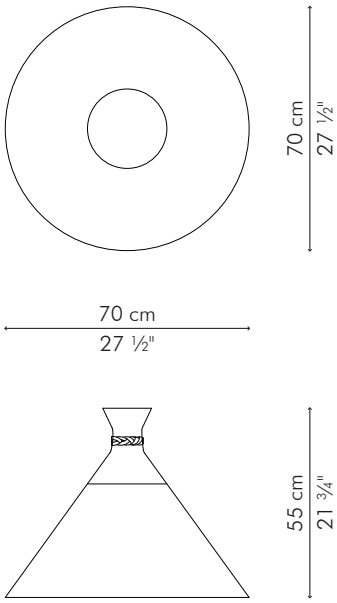

	LARGE	EXTRA LARGE
	0.50 kg / 1 lb	0.70 kg / 1.5 lbs
KG	2.75 kg / 6 lbs	5 kg / 11 lbs
m^3	0.119 m^3	0.324 m^3
	1 x 100 watts	1 x 100 watts
code:	LLU-B-1429	LLU-B-2721

Surface mounted pre-wired lamp
E26 / E27
110V - 240V

INDOOR Salago fiber, Buri (palm leaf spines), powder coated steel

Cream / Brown